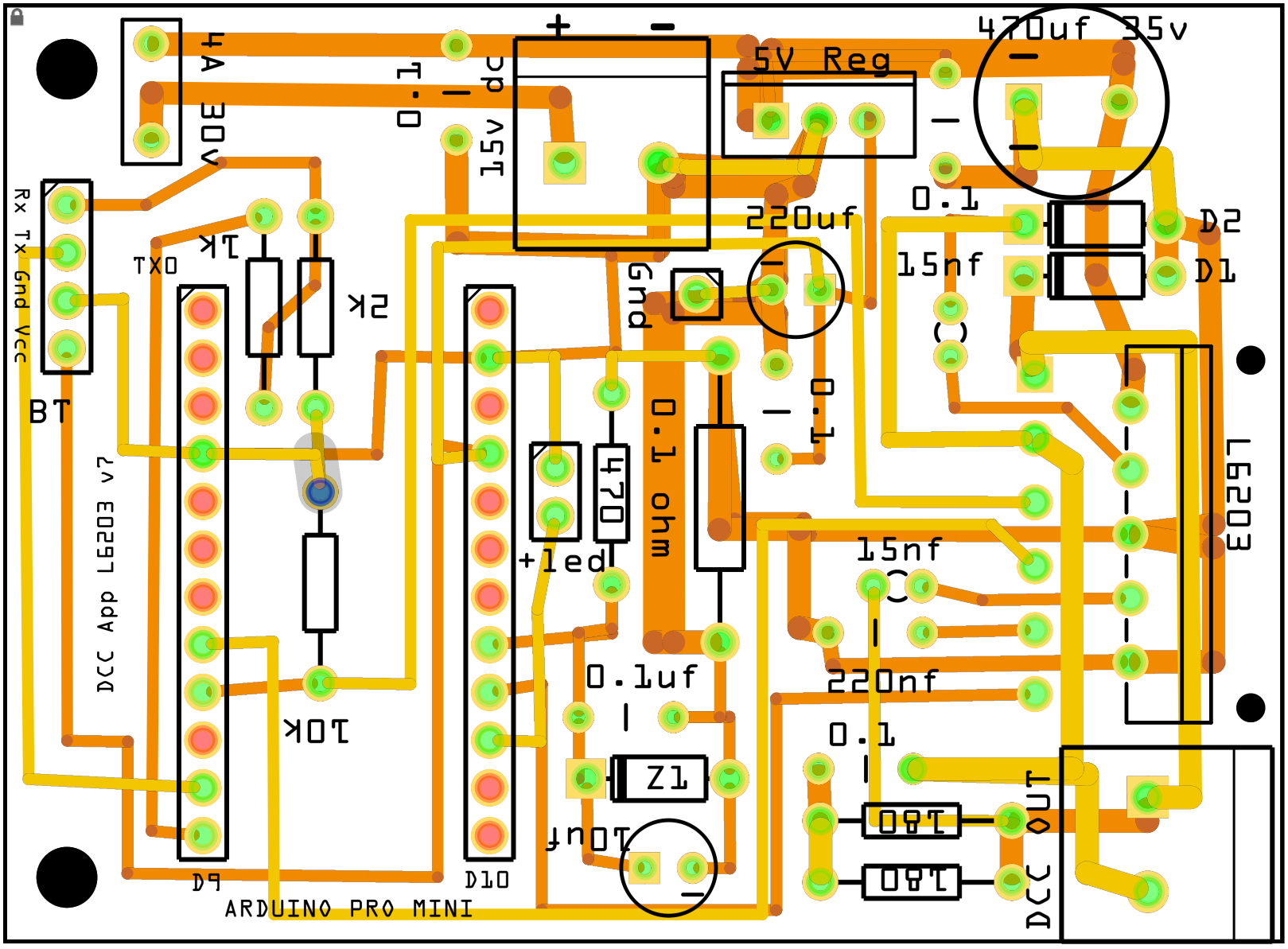
4A 30v
Rx Tx Gnd Vcc
BT
TXO
1K
2K
10K
DCC App L6203 v2
D9
D10
ARDUINO PRO MINI
0.1
15v dc
+
-
5V Reg
470uf 35v
0.1
220uf
Gnd
0.1 ohm
0.1
15nf
D2
D1
L6203
470
+led
0.1uf
Z1
10uf
15nf
220nf
0.1
180
180
DCC OUT

fritzing