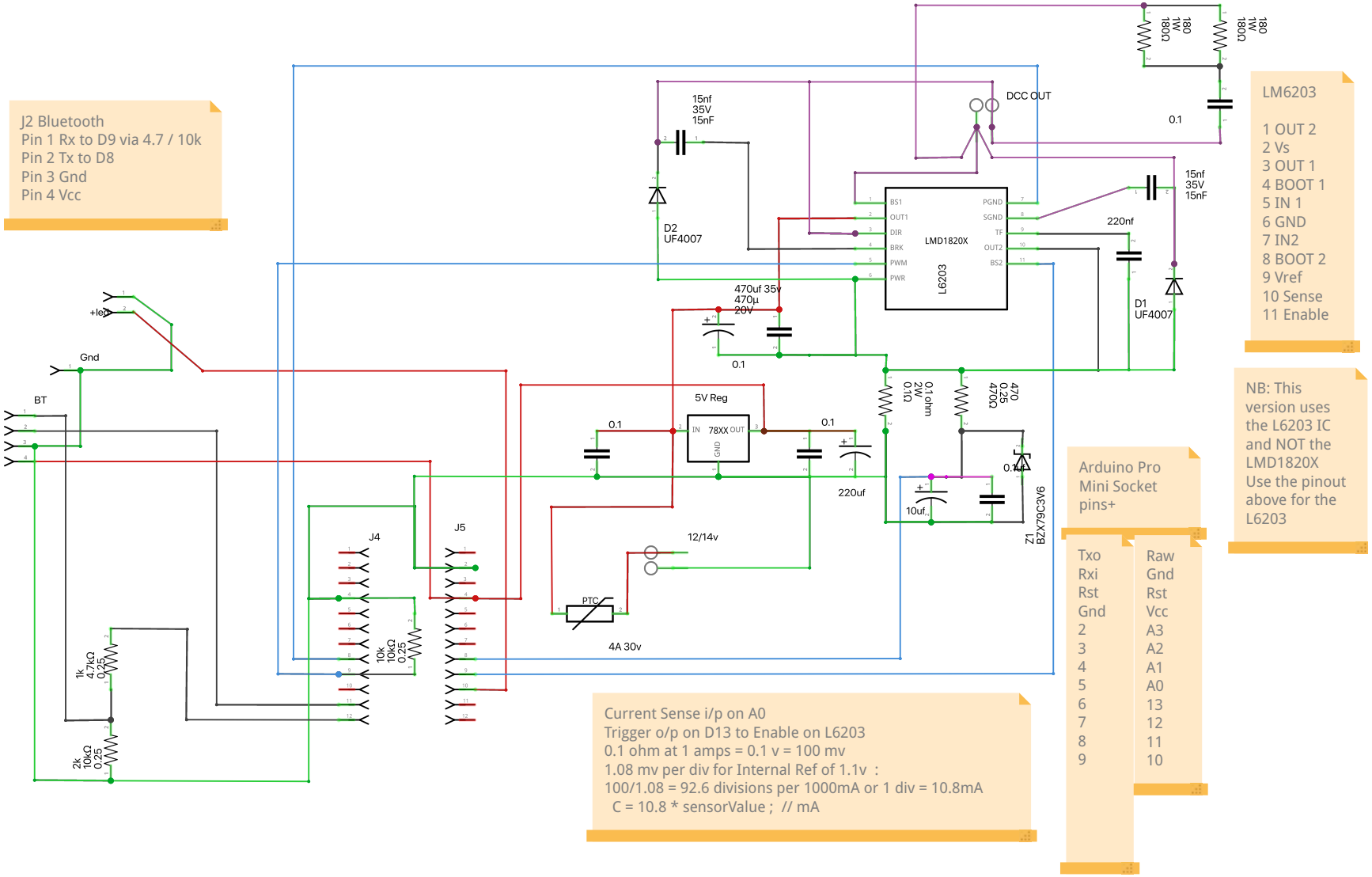
J2 Bluetooth
Pin 1 Rx to D9 via 4.7 / 10k
Pin 2 Tx to D8
Pin 3 Gnd
Pin 4 Vcc
LM6203
1 OUT 2
2 Vs
3 OUT 1
4 BOOT 1
5 IN 1
6 GND
7 IN2
8 BOOT 2
9 Vref
10 Sense
11 Enable
NB: This version uses the L6203 IC and NOT the LMD1820X
Use the pinout above for the L6203
Arduino Pro Mini Socket pins+
Txo Rxi Rst Gnd 2 3 4 5 6 7 8 9
Raw Gnd Rst Vcc A3 A2 A1 A0 13 12 11 10
Current Sense i/p on A0
Trigger o/p on D13 to Enable on L6203
0.1 ohm at 1 amps = 0.1 v = 100 mv
1.08 mv per div for Internal Ref of 1.1v :
100/1.08 = 92.6 divisions per 1000mA or 1 div = 10.8mA
C = 10.8 * sensorValue ; // mA
DCC OUT
LMD1820X
L6203
BS1
OUT1
DIR
BRK
PWM
PWR
PGND
SGND
TF
OUT2
BS2
15nf 35V 15nF
D2 UF4007
D1 UF4007
220nf
470uf 35v 470µ 20V
0.1
5V Reg
78XX
IN
OUT
GND
220uf
10uf
12/14v
PTC
4A 30v
Z1 BZX79C3V6
0.1ohm 2W 0.1Ω
470 0.25 470Ω
180 1W 180Ω
J4
J5
BT
Gnd
+led
1k 4.7kΩ 0.25
2k 10kΩ 0.25
10k 10kΩ 0.25